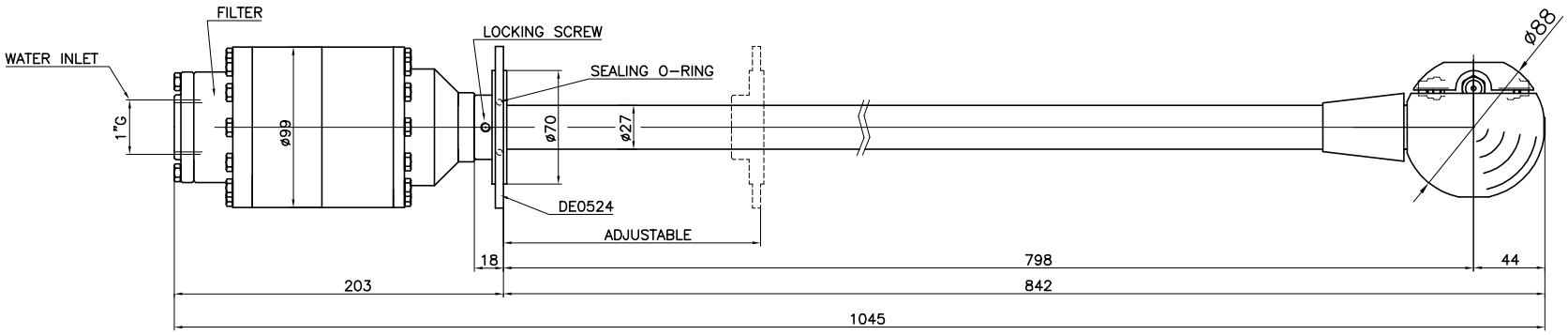

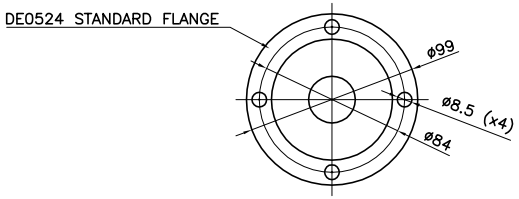

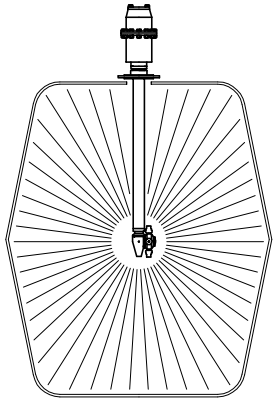

TECHNICAL DATA	
O.RING	NBR – EPDM – VITON
SLIPPER	PTFE+CARBON FIBRE
BUSHING	AISI 316
FILTER	700 MICRON
NOZZLES POSITIONS	2 – 4
NOZZLES THREAD	1/8"NPT
TESTING NOZZLES	0 x 0000
OPERATING FLOW RANGE	10 – 60 L/min
TESTING FLOW	00 L/min
OPERATING PRESSURE RANGE	0 – 200 bar
TESTING PRESSURE	000 bar
CENTER LINE MIN PASS THROUGH HOLE	95 mm
MANUAL MIN PASS THROUGH HOLE	76 mm
PIPE LENGHT	1018 mm (STANDARD)
MAX OPERATING TEMPERATURE	90 °C
MATERIAL	INOX AISI 316
CONICAL GEARS	FIXED Z=29 ROTATING Z=31
MODULE	1
ROTATION SPEED RANGE	15 TO 25 RPM
FULL CYCLE	31 ROTATIONS
FULL CYCLE TIME	1.5 min AT 20 RPM

RUGOSITA' (UNI 4600)

GREZZO ~ = 6.3

SGROSS. ▽ = 3.2

FINITURA ▽▽ = 1.6

RETTIFICA ▽▽▽ = 0.8

MODIFICA	1	2	3	4	5
FOGLIO	XXXX				
DATA	XX.XX.XX				

TOLLERANZE GENERALI classe m UNI–EN 22768/1

0÷6	6÷30	30÷120	120÷400	400÷1000	1000÷2000
±0.1	±0.2	±0.3	±0.5	±0.8	±1.2

NOTE:

DESCRIZIONE: XC 061AAH–TK GJ0194
APPLICATION DRAWING

Bolondi
CLEANING HEADS
MONTECCHIO E. (RE) – ITALY

DISEGN.: CR | CONTR.: DM
DATA: 02.10.08 | MOD.
SCALA 1:3 | A3 | 0
CODICE: XC061–AAH–TK